KRECK ROBOTICS

SMART DOORLOCK

SERIES-1PRO BASIC



www.kreckrobotics.com | +91 75187 57518

UNIQUE FEATURES

FAST FINGERPRINT SENSOR

50 fingerprints can be registered in this lock and unlocking speed is 0.5 seconds only.

RFID CARD

100 RFID cards can be registered in this lock. The RFID card is specially designed for this lock only for your security.

PIN OPTION WITH VERY FINE TOUCH KEY PAD

You can register 100 PINs in this lock and the Touch Key Pad is very fine to use.

LOW BATTERY INDICATION

The lock will give you an indication on the screen that the battery is low.

RECORD HISTORY

You can check past unlocking records.

EMERGENCY POWER

In case the battery is completely discharged, an external 5V Micro USB type cable can be used to give power to the lock.

AUTO LOCKING SYSTEM

The lock will eliminate manual locking as it will get locked automatically when the door gets closed.



www.kreckrobotics.com | +91 75187 57518

PRODUCT PARAMETER

Power Supply: 4.5V–6V (4 pcs AA Cell power)

Unlock Methods: Fingerprint / RFID card
Passcode / Mechanical Key

Quiescent Current: <50–65uA

Passcode Length: 6–8 Bits

Card Volume: 100 pcs

Password Volume: 100 pcs

Finger Volume: 50 pcs

Administrator: 9

Lower Voltage Alarm: 4.5±0.2V

Operating Temperature: -10°C ~ 60°C

Door Thickness: 38–120mm

Material: Aluminium Alloy

Size: 358 × 70 × 72 MM (Indoor / Outdoor)



USER MANAGEMENT

1. Initialization

Press the set button (rear panel button) for 5 seconds.
Voice will remind: “Initialization successfully.”
Note: Initialization password is 123456, or any fingerprint can unlock the lock.

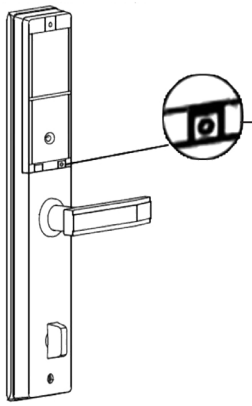

Long press the back lock setting key. The countdown will finish in 5 seconds, then release. Factory settings will be restored successfully.

2. Add Administrator Information

(Up to three administrator users)

\# → Confirm
* → Back

In Initialization State:
To wake up the screen, press #

- Enter password (minimum 6 digits) → Enter same password to confirm → Press # to finally add / Or press * to go back
- To Add Fingerprint → Gently touch and release finger on sensor (may be 7-8 times) Continuously voice prompt says “Added Successfully”
- To Add RFID Card → Just Place The Card on CARD Symbol on the lock screen

3. Language Settings

Press “*#” on touch pad

Voice prompt “Please verify Admin” then enter admin information

Voice prompt
- Add User
- Delete User
- Lock setting
- Add Admin

Voice prompt
- Function setting
- Volume setting
- Language setting
- More setting

Voice prompt
- Chinese
- English

USER MANAGEMENT

4. Add General User Information

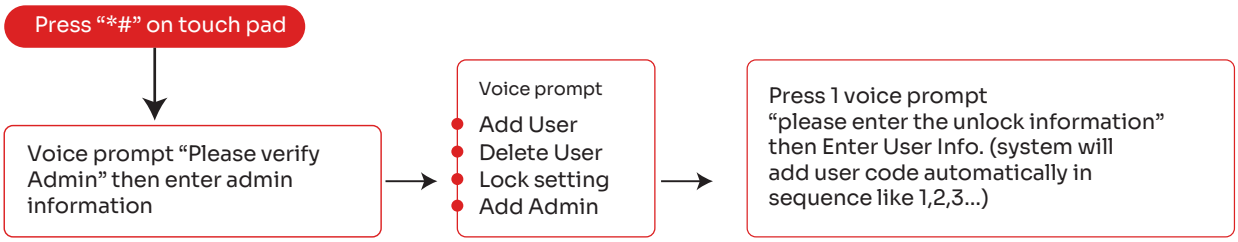

5. Delete User information

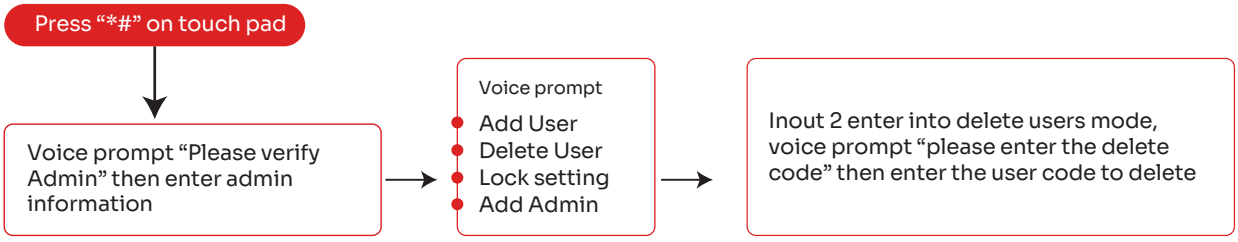

6. Normally Unlock / Passage mode

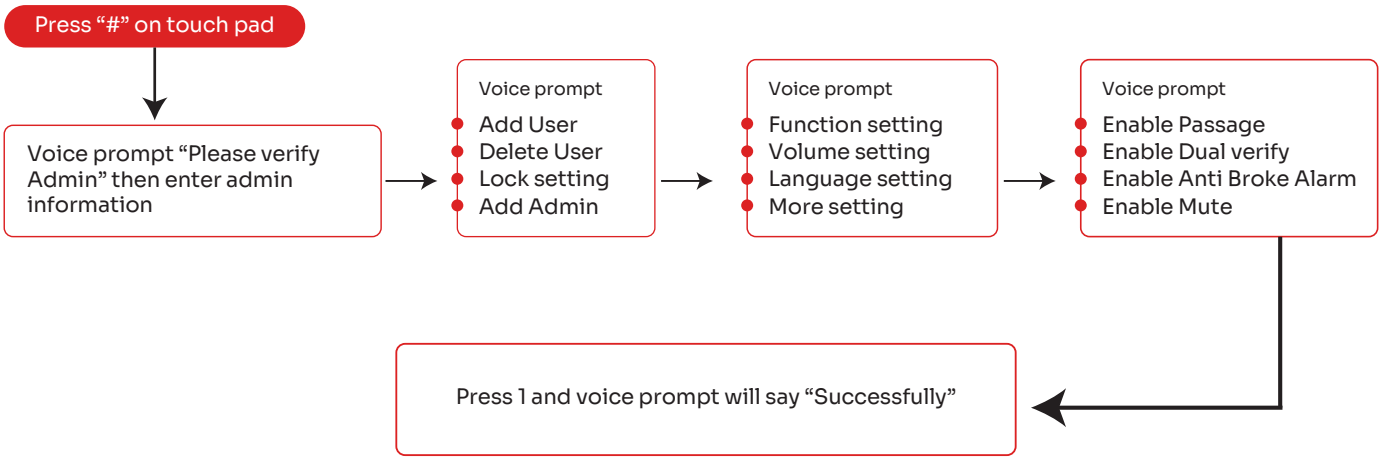

Note: After the normally open mode is turned on, every unlocking is normally open mode and the lock will not be automatically closed, so it is necessary to manually unlock the lock once.

Semi Installation Diagram

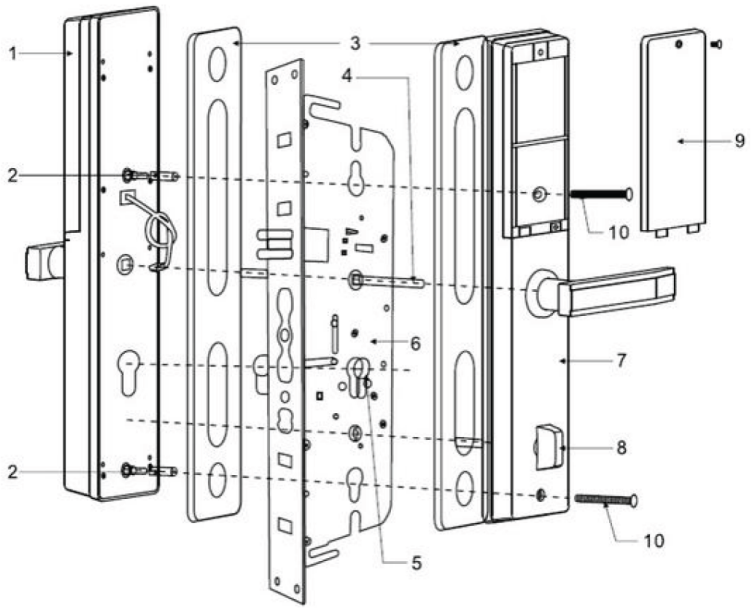

- Front panel
- Connecting pipe
- Silicone pad
- Fangxin
- Lock cylinder
- Lock body
- Rear panel
- Indoor locking knob
- Battery cover
- Screw-fitting.

Note: When installing semi-automatic lock, adjust the clutch and direction of handle according to the direction of door opening.

SMART DOORLOCK

SERIES-1PRO BASIC



KRECK ROBOTICS

Download Kreck Robotics App

GET IT ON Google Play

Download on the App Store

www.kreckrobotics.com | +91 75187 57518